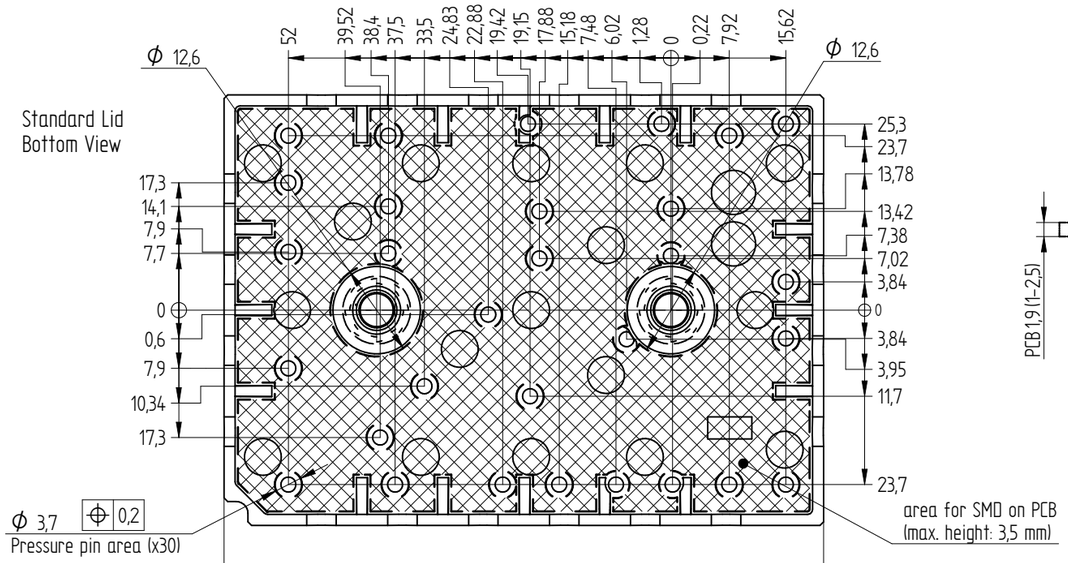

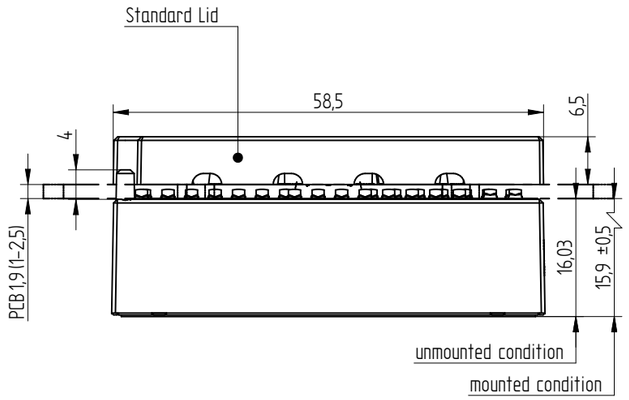

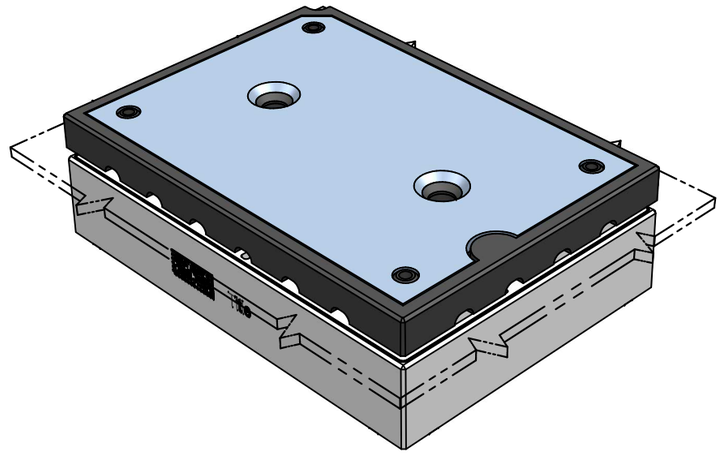

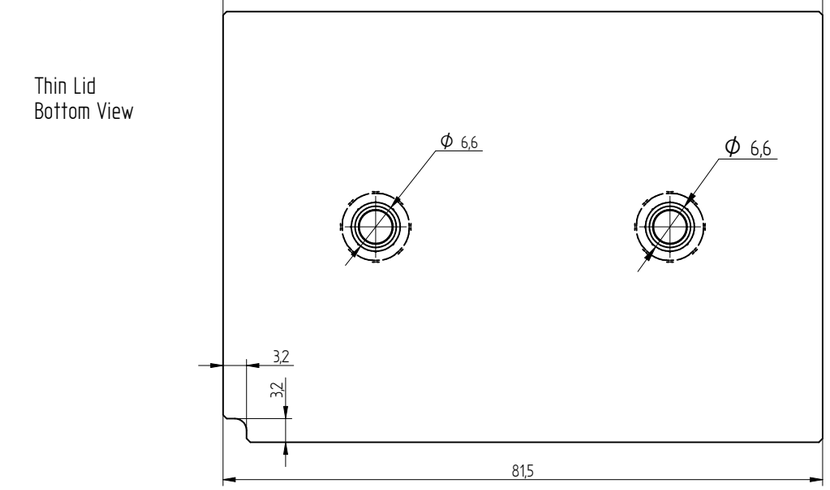

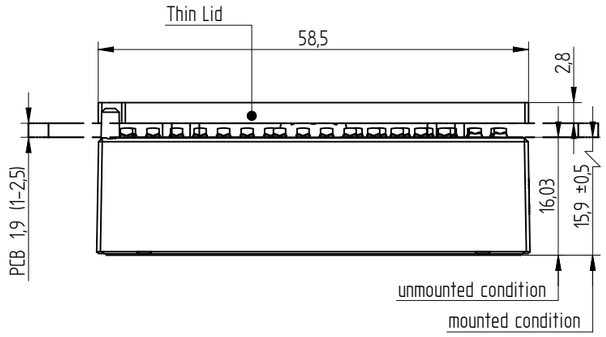

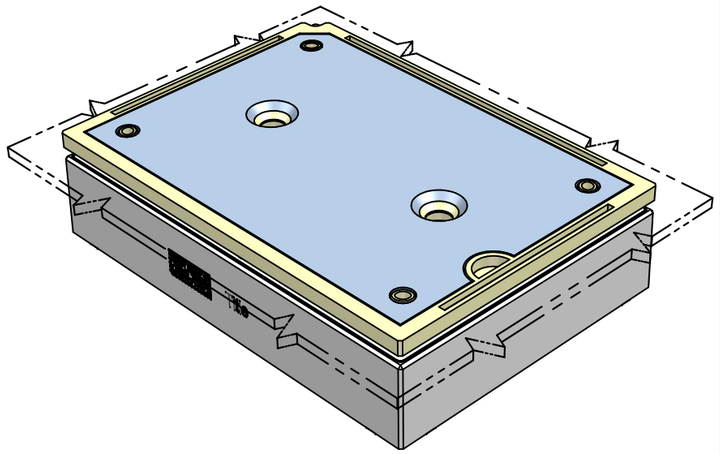

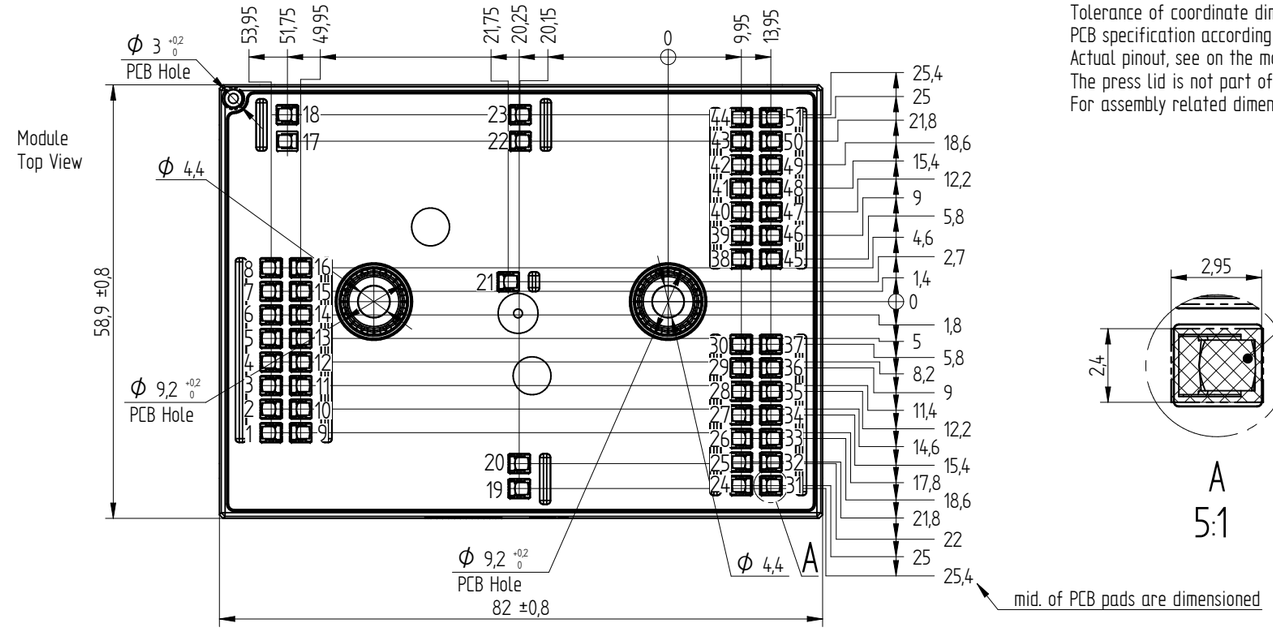

Tolerance of coordinate dimensions: ±0,1mm
PCB specification according to the actual handling instruction
Actual pinout, see on the module datasheet
The press lid is not part of the module, it has to be ordered separately
For assembly related dimensions refer to the attached 3D-CAD models

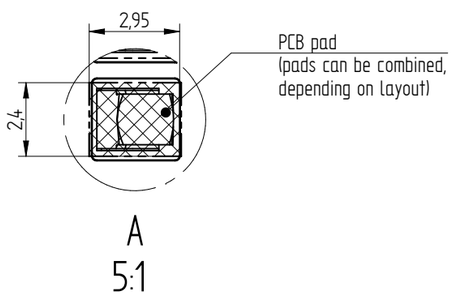

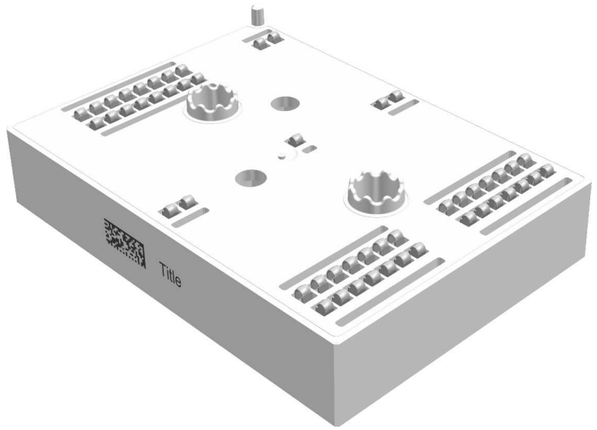

01	22.04.2016	initial release	Géczy M.	Gyimóthy Zs.	Package Drawing	View scale 1,2:1
Rev.	Date	Alteration	Designed	Approved		
General tolerances ISO 2768 - m , K				Ps A3		
Linear dimensions	x<0,5 ±0,05	0,5≤x<6 ±0,1	6≤x<30 ±0,2	30≤x<120 ±0,3	120<x ±0,5	
Chamfers, radii	x<0,3 ±0,05	0,3≤x<0,5 ±0,1	0,5≤x<3 ±0,2	3≤x<6 ±0,5	6<x ±1	
References	Inspectional dim:		Revision number (Rev.): *			

Vincotech

IP Development

Skiip3D-*-PD

Page 1/1

Drawing alteration in revision: {}

Proprietary data, company confidential. All rights reserved.